SYPHON TUBES

SensorComp
Sensing Solutions for a Smarter World

HOW TO READ CODE

SC - SYT90 - 14SCH40 - SS304

1 2 3

1

Product Type	
SYT90	Syphon Tube 90º
SYT180	Syphon Tube 180º
SYT270	Syphon Tube 270º

2

Thread	
14SCH40	1/4” NPT Schedule 40

3

Material	
SS304	SS 304
SS316	SS 316
SS321	SS 321
BR	Brass
CS	Carbon Steel
IN	Inconel
MO	Monel
CO	Copper
TI	Titanium
HAS	Hastelloy
STL	Stellite
AL	Aluminium

SYPHON TUBES

SensorComp
Sensing Solutions for a Smarter World

SYPHON TUBES

90º



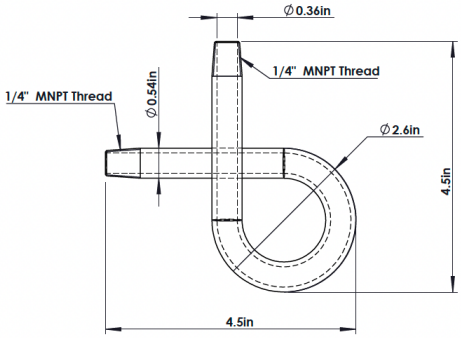

180º



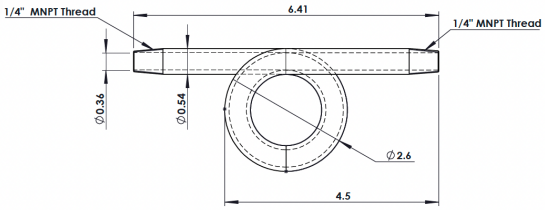

270º



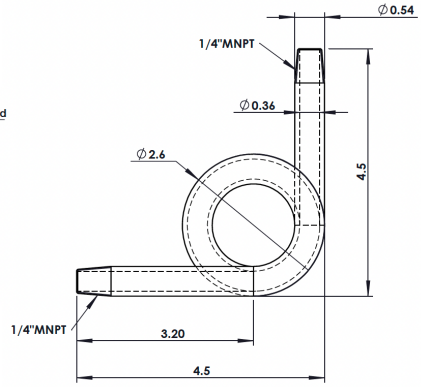

Part No.	Type	Material	Thread
SC-SYT90-14SCH40-SS304	90º	SS 304	1/4” NPT Schedule 40
SC-SYT90-14SCH40-SS316		SS 316	
SC-SYT90-14SCH40-CS		Carbon Steel	
SC-SYT180-14SCH40-SS304	180º	SS 304	1/4” NPT Schedule 40
SC-SYT180-14SCH40-SS316		SS 316	
SC-SYT180-14SCH40-CS		Carbon Steel	
SC-SYT270-14SCH40-SS304	270º	SS 304	1/4” NPT Schedule 40
SC-SYT270-14SCH40-SS316		SS 316	
SC-SYT270-14SCH40-CS		Carbon Steel	

For trade inquiries click here!

info@sensorcomp.com www.sensorcomp.com